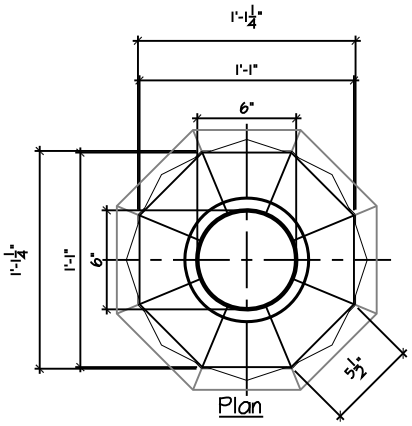

Plan

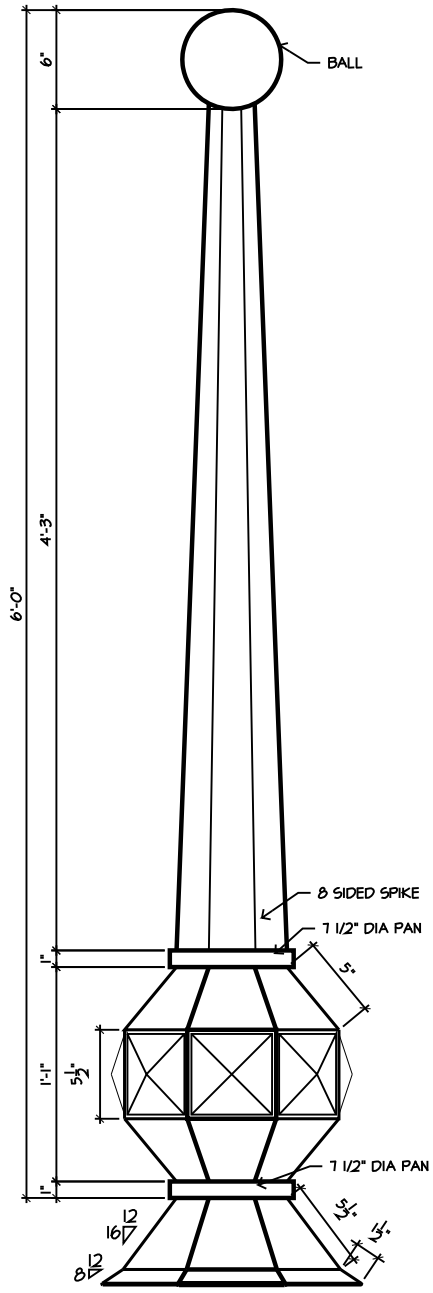

Elevation

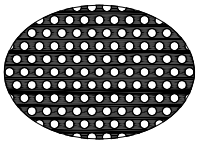

FRONT VIEW OF PERFORATED 'Z' SUPPORT STRIP

OLD WORLD DISTRIBUTORS, INC.®

Part No.: Waterbury Finial - F36

Available Materials:	Notes:
16 oz Copper (.021 thickness) 16 oz Lead Coated Copper (.021 thickness) Perforated 20 oz Copper 'Z' Strip - 3/32" Perforated w/ 5/32" Staggered Centers	Copper Rivet - C/B44D Stainless Steel Screw - #10 + 1 1/2"